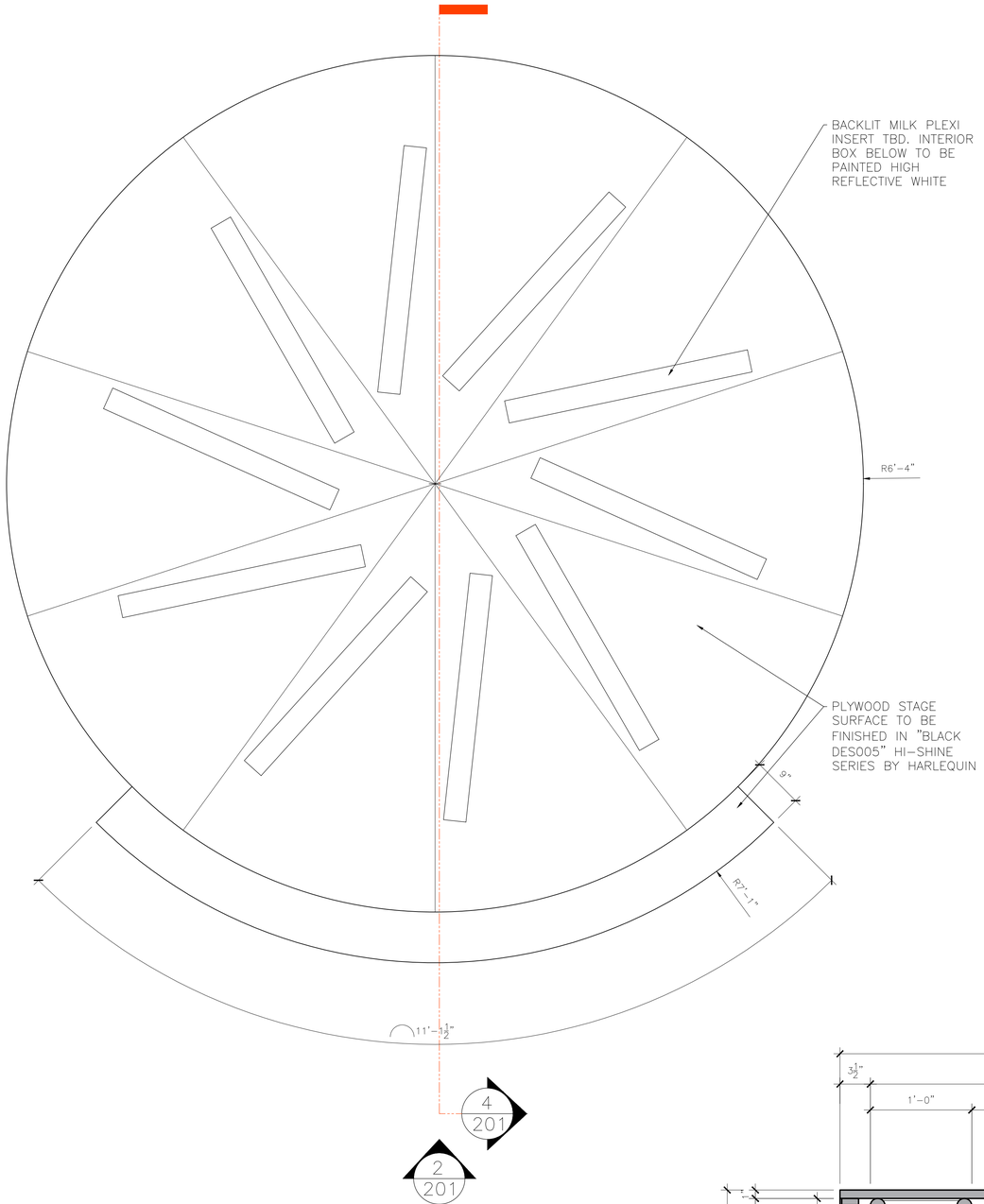

1 201 STAGE PLAN
SCALE: 1" = 1'-0"

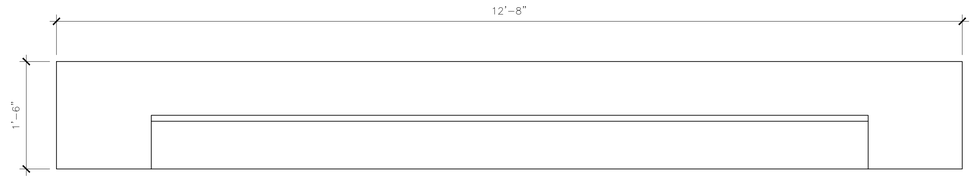

2 201 STAGE ELEVATION PLAN
SCALE: 1" = 1'-0"

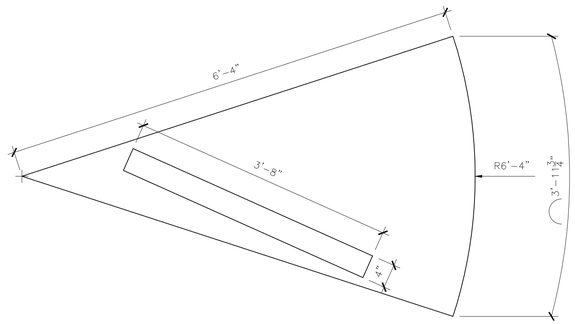

3 201 STAGE WEDGE CNC OUTLINE
SCALE: 1" = 1'-0"

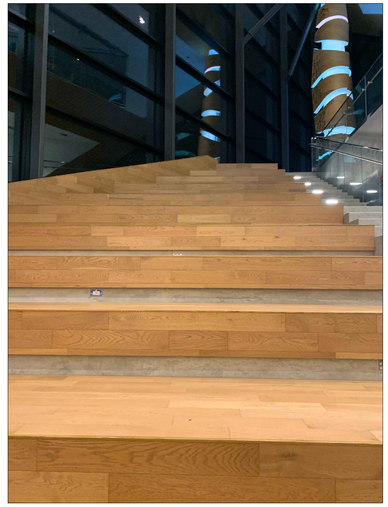

LOCATION REFERENCE IMAGE

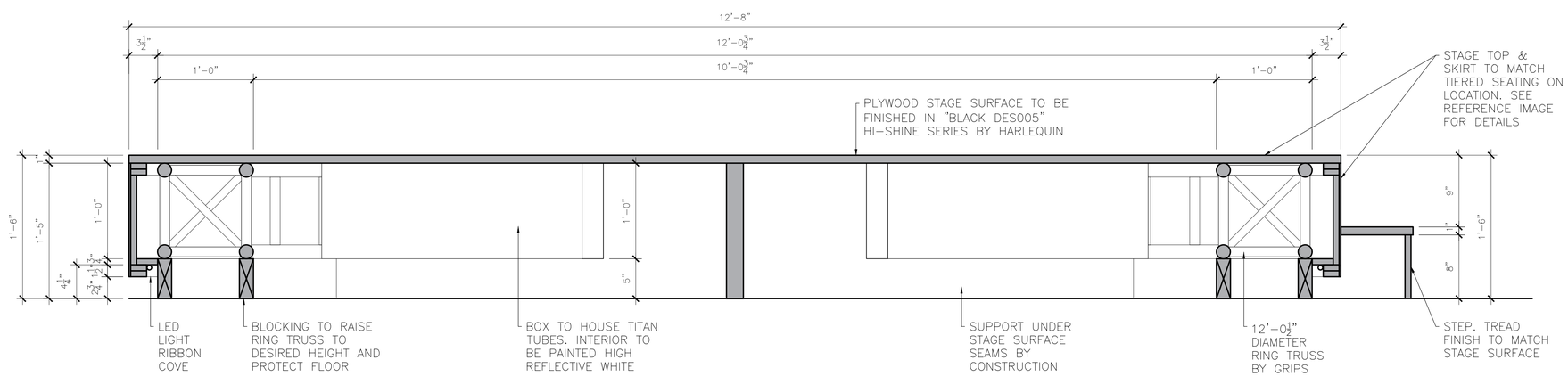

4 201 STAGE SECTION
SCALE: 1 1/2" = 1'-0"

ISSUED
OCT 24/22

ORPHAN BLACK: *ECHOES*	ORPHAN BLACK SPINOFF PRODUCTIONS LTD. 2480 STANFIELD RD. MISSISSAUGA, ON, L5Y1S2 T: 647.689.8010	Production Designer: AIDAN LEROUX	Set name.: INT. ADDITIVE FOUNDATION LOBBY - STAGE	Date: OCT 24, 2022	Scale: AS NOTED	Revised:	Revision no.:	Set no.: 0523	Sheet no.: 201
		Art Director: ALDER DUNLAP	Location address: HUMBER COLLEGE, BRAMPTON, ON	Drawn by: E.S.	Sheet name: ADDITIVE STAGE DETAILS				